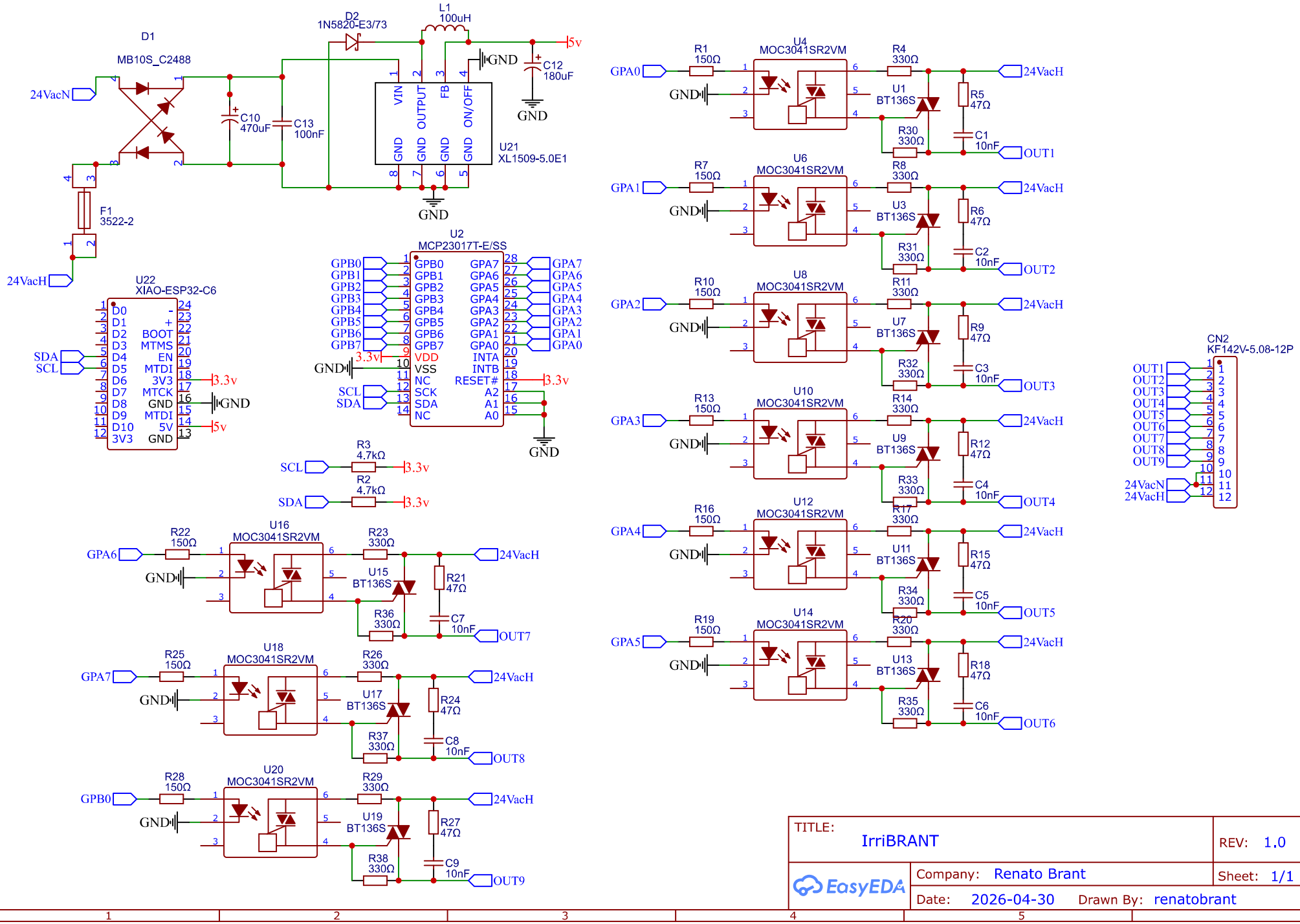
D1
MB10S_C2488
D2
1N5820-E3/73
L1
100uH
5v
C12
180uF
GND
24VacN
C10
470uF
C13
100nF
VIN
OUTPUT
FB
ON/OFF
GND
GND
GND
GND
U21
XL1509-5.0E1
F1
3522-2
24VacH
U22
XIAO-ESP32-C6
D0
D1
D2
D3
D4
D5
D6
D7
D8
D9
D10
3V3
BOOT
MTMS
EN
MTDI
3V3
MTCK
GND
MTDI
5V
GND
SDA
SCL
3.3v
GND
5v
U2
MCP23017T-E/SS
GPB0
GPB1
GPB2
GPB3
GPB4
GPB5
GPB6
GPB7
VDD
VSS
NC
SCK
SDA
NC
GPA7
GPA6
GPA5
GPA4
GPA3
GPA2
GPA1
GPA0
INTA
INTB
RESET#
A2
A1
A0
R3
4.7kΩ
R2
4.7kΩ
U16
MOC3041SR2VM
U15
BT136S
R22
150Ω
R23
330Ω
R36
330Ω
R21
47Ω
C7
10nF
OUT7
U18
MOC3041SR2VM
U17
BT136S
R25
150Ω
R26
330Ω
R37
330Ω
R24
47Ω
C8
10nF
OUT8
U20
MOC3041SR2VM
U19
BT136S
R28
150Ω
R29
330Ω
R38
330Ω
R27
47Ω
C9
10nF
OUT9
U4
MOC3041SR2VM
U1
BT136S
R1
150Ω
R4
330Ω
R30
330Ω
R5
47Ω
C1
10nF
OUT1
U6
MOC3041SR2VM
U3
BT136S
R7
150Ω
R8
330Ω
R31
330Ω
R6
47Ω
C2
10nF
OUT2
U8
MOC3041SR2VM
U7
BT136S
R10
150Ω
R11
330Ω
R32
330Ω
R9
47Ω
C3
10nF
OUT3
U10
MOC3041SR2VM
U9
BT136S
R13
150Ω
R14
330Ω
R33
330Ω
R12
47Ω
C4
10nF
OUT4
U12
MOC3041SR2VM
U11
BT136S
R16
150Ω
R17
330Ω
R34
330Ω
R15
47Ω
C5
10nF
OUT5
U14
MOC3041SR2VM
U13
BT136S
R19
150Ω
R20
330Ω
R35
330Ω
R18
47Ω
C6
10nF
OUT6
GPA0
GPA1
GPA2
GPA3
GPA4
GPA5
GPA6
GPA7
GPB0
CN2
KF142V-5.08-12P
OUT1
OUT2
OUT3
OUT4
OUT5
OUT6
OUT7
OUT8
OUT9
24VacN
24VacH
TITLE:
IrriBRANT
REV: 1.0
Company: Renato Brant
Sheet: 1/1
Date: 2026-04-30
Drawn By: renatobrant
EasyEDA